# Elektrim® Premium All-Purpose Motors (31N Series)

| | | | | | CONT. | TEFC | 286TC |
|---|---|---|---|---|---|---|---|

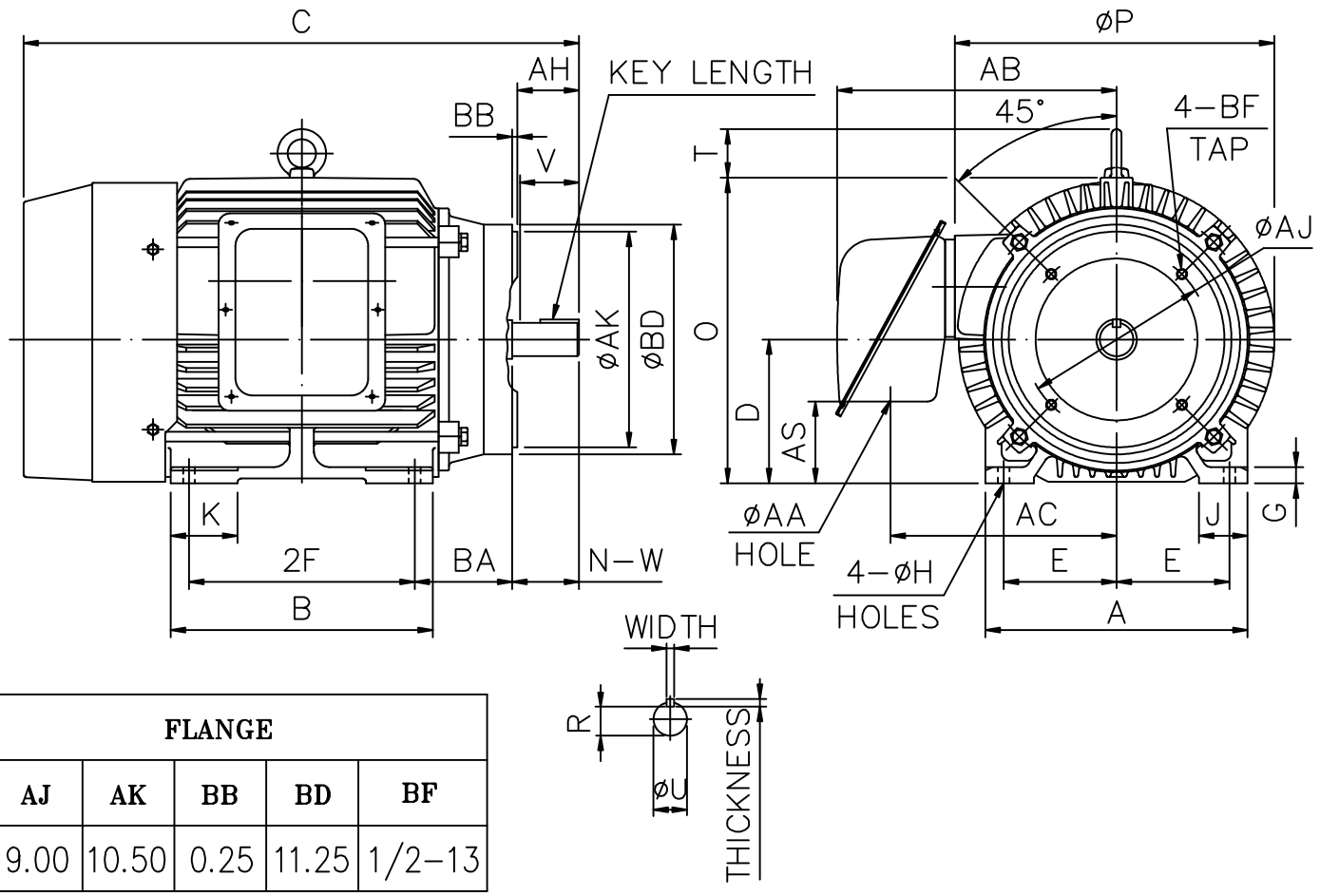


| FLANGE | | | | |
|---|---|---|---|---|
| AJ | AK | BB | BD | BF |
| 9.00 | 10.50 | 0.25 | 11.25 | 1/2–13 |

| A | B | C | D | E | 2F | G | H | J | K | O+T | P | AA | AB | AH |
|---|---|---|---|---|---|---|---|---|---|---|---|---|---|---|
| 12.76 | 12.76 | 28.4 | 7.00 | 5.50 | 11.0 | 0.79 | 0.53 | 2.36 | 3.25 | 17.30 | 15.67 | 2.48 | 13.4 | 4.38 |

| AC | AS | BA | KEY | | | KEYSEAT | SHAFT EXTENSION | | | BEARING NO. | | APPROX WEIGHT |
|---|---|---|---|---|---|---|---|---|---|---|---|---|
| | | | WIDTH | THICK-NESS | LENGTH | R | N–W | U | V | D.E | O.D.E | |
| 11.0 | 4.05 | 4.75 | 0.50 | 0.50 | 3.28 | 1.591 | 4.62 | 1.875 | 4.5 | 6310ZZ | 6210ZZ | 513 lb |

NOTE:
1. TOLERANCE OF SHAFT END DIAMETER U: +0.000,–0.001
2. TOLERANCE OF SHAFT CENTER HEIGHT D: +0.000,–0.03
3. DIMENSION R TOLERANCE: +0.000,–0.015
4. DIMENSION AK TOLERANCE: +0.000,–0.003
5. DIMENSION V IS LENGTH OF STRAIGHT PART OF SHAFT.

# C-FACE